FRONT PANEL CONNECTIONS 7.1

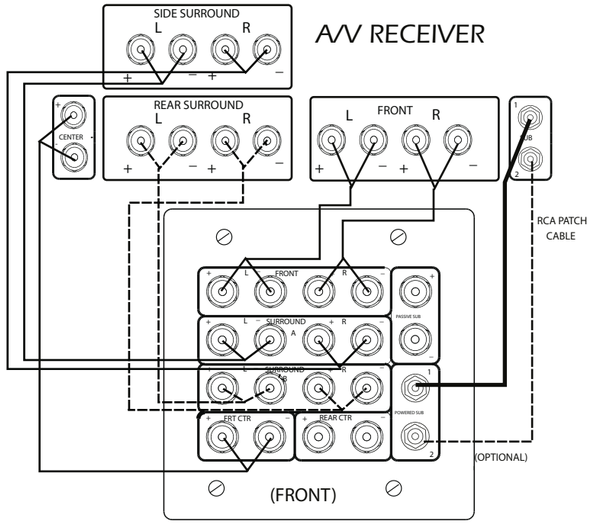

REAR PANEL CONNECTIONS 7.1

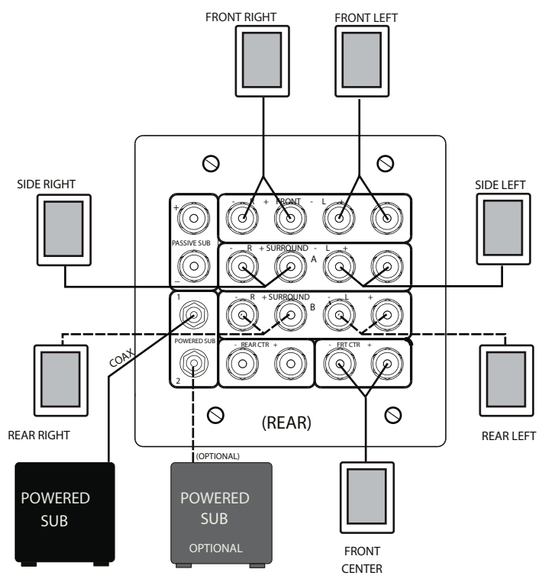

P/N 9900781 REV:A

940 Columbia Ave., Riverside CA 92507
(800) 448-0976 Fax (909) 787-8747
www.speakercraft.com

SpeakerCraft
LIT90350

TSP-100
Owner's Manual

The TSP-100 wall plate provides an attractive and convenient way to connect an amplifier's speaker outputs to pre-wired speakers throughout the home. Each TSP-100 wall plate has gold-plated, color-coded binding posts that can accept up to 14 gauge speaker wire, spade lugs, pins, or banana plugs.

Always use stranded copper, twisted pair cable (min 18 AWG.)
SpeakerCraft recommends using RG 6 coaxial cable for powered subs.

TSP-100

Double-gang wall plate for Surround Sound receiver or amplifier. Connects all speakers for 5.1, 6.1, and 7.1 digital surround systems and Pro Logic/ Pro Logic II analog systems. Provisions for powered and passive subwoofers. Use in-wall behind receiver or amplifier.

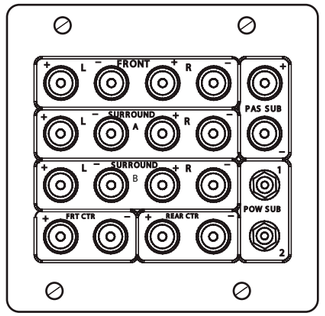

TSP-100 Passive Sub Connections

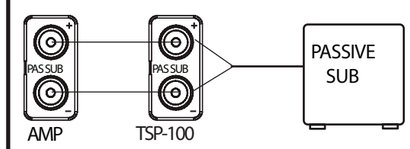

TSP-100 Powered Subwoofer Connections

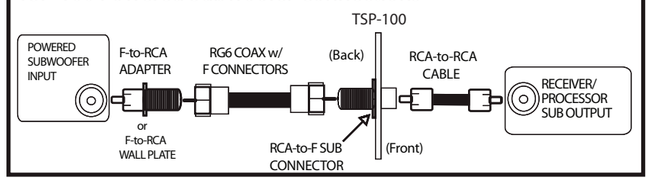

FRONT PANEL CONNECTIONS 5.1

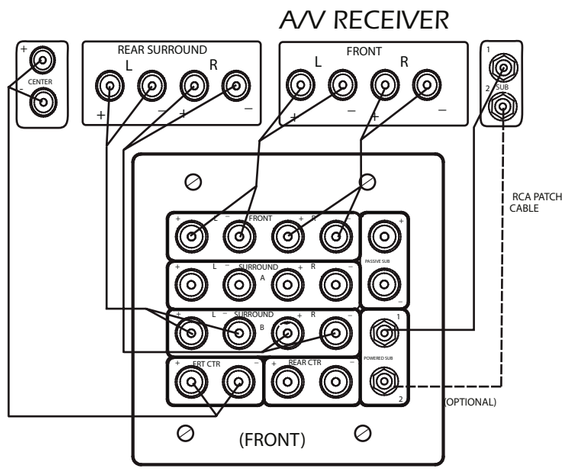

REAR PANEL CONNECTIONS 5.1

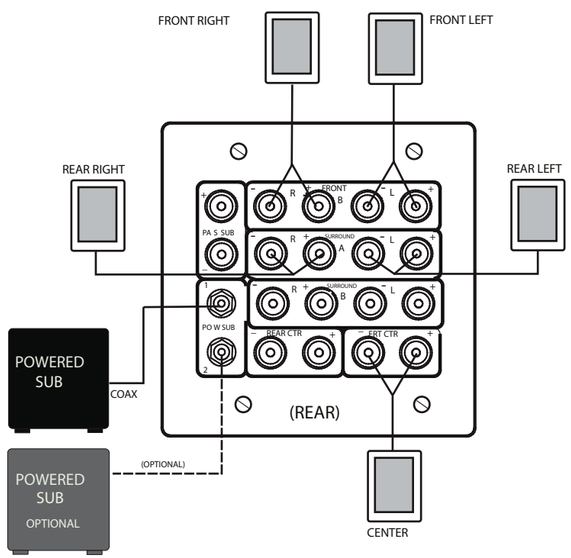

FRONT PANEL CONNECTIONS 6.1

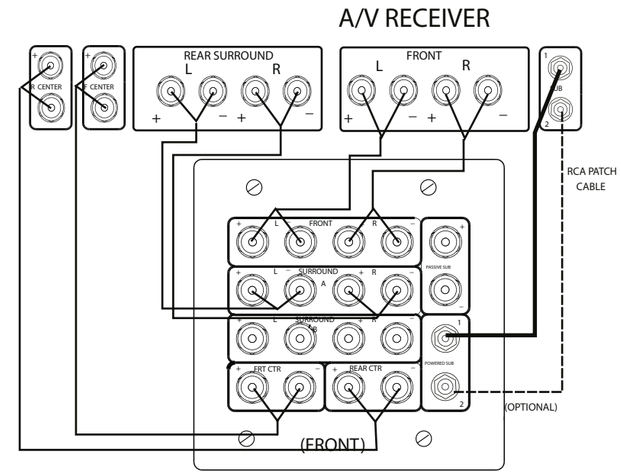
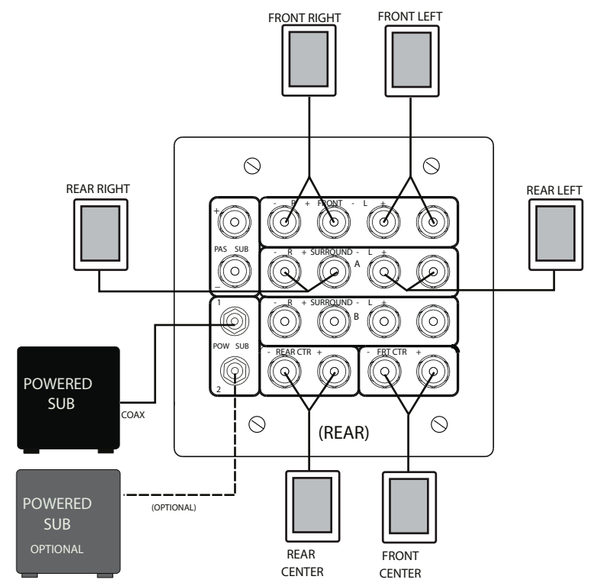
REAR PANEL CONNECTIONS 6.1