PRINTER'S INSTRUCTIONS:
INSTR,INSTL,EMX-1.0 • LINEAR P/N: 224725X1 • INK: BLACK • MATERIAL: 70 LB. GLOSS WHITE COATED PAPER • SIZE: 8.500" X 14.000" FOLD TO 4.250" X 3.500" • FOLDING: VERTICAL ONE FOLD, HORIZONATAL 4- ACCORDION FOLD ENDING WITH LOGO SHOWING • SCALE: 1-1

INSTRUCTIONS

EMX-1.0

10-Port Emitter Expansion Terminator

Including **PTP-1**

1' Plug-to-plug Jumper Cable

ELT02200

6 64254 19532 7

ELT02200
224725X1

LIT02200

LIMITED 5-YEAR WARRANTY

SpeakerCraft Inc. warrants to the original retail purchaser only that this SpeakerCraft product will be free from defects in materials and workmanship, for a period of 5-years, provided it was purchased from a SpeakerCraft Authorized Dealer.

Defective products must be shipped, together with proof of purchase, prepaid insured to the SpeakerCraft Authorized Dealer from whom they were purchased, or to the SpeakerCraft factory at the address listed on this installation instruction manual. Freight collect shipments will be refused. It is preferable to ship this product in the original shipping container to lessen the chance of transit damage. In any case, the risk or loss or damage in transit is to be borne by the purchaser. If upon examination at the Factory or SpeakerCraft Authorized Dealer it is determined that the unit was defective in materials or workmanship at any time during this warranty period, SpeakerCraft or the SpeakerCraft Authorized Dealer will, at its option, repair or replace this product at no additional charge, except as set forth below. If this model is no longer available and can not be repaired effectively, SpeakerCraft, at its sole option may replace the unit with a current model of equal or greater value. In some cases where a new model is substituted, a modification to the mounting surface may be required. If mounting surface modification is required, SpeakerCraft assumes no responsibility or liability for such modification. All replaced parts and product become the property of SpeakerCraft Inc. Products replaced or repaired under this warranty will be returned to the original retail purchaser, within a reasonable time, freight prepaid.

This warranty does not include service or parts to repair damage caused by accident, disaster, misuse, abuse, negligence, inadequate packing or shipping procedures, commercial use, voltage inputs in excess of the rated maximum of the unit, or service, repair or modification of the product which has not been authorized or approved by SpeakerCraft. This warranty also excludes normal cosmetic deterioration caused by environmental conditions. This warranty will be void if the Serial number on the product has been removed, tampered with or defaced.

This warranty is in lieu of all other expressed warranties. If the product is defective in materials or workmanship as warranted above, the purchaser's sole remedy shall be repair or replacement as provided above. In no event will SpeakerCraft be liable for any incidental or consequential damages arising out of the use or inability to use the product, even if SpeakerCraft Inc. or a SpeakerCraft Inc. Authorized Dealer has been advised of the possibility of such damages, or for any claim by any other party. Some states do not allow the exclusion or limitation of consequential damages, so the above limitation and exclusion may not apply. All implied warranties on the product are limited to the duration of this expressed warranty. Some states do not allow limitation on the length of an implied Warranty. If the original retail purchaser resides in such a state, this limitation does not apply.

SpeakerCraft®
940 Columbia Avenue, Riverside, CA 92507 ▪ Phone 1-800-448-0976 ▪ Fax 951-787-8747
www.speakercraft.com

PRINTER'S INSTRUCTIONS:
INSTR,INSTL,EMX-1.0 • LINEAR P/N: 224725X1 • INK: BLACK • MATERIAL: 70 LB. GLOSS WHITE COATED PAPER • SIZE: 8.500" X 14.000" FOLD TO 4.250" X 3.500" • FOLDING: VERTICAL ONE FOLD, HORIZONATAL 4- ACCORDION FOLD ENDING WITH LOGO SHOWING • SCALE: 1-1

EMX-1.0
Ten-Port Emitter Expansion Terminator

The EMX-1.0 provides a quick and low cost means of expanding the number of emitters that can be driven from a SpeakerCraft AT-1.0 Amplified Terminator or other high IR output source in IR repeater systems. It is a passive expander that includes current sharing resistors at each Emitter jack allowing any combination of single or dual emitters to be used. A HIGH IR LOOP OUT is provided for daisy-chaining additional EMX-1.0's so that even more emitters can be driven (up to a max. of 50 emitters).

FEATURE DESCRIPTIONS

1. **HIGH IR IN** – 3.5mm jack accepts IR drive from Blaster (BL ON setting) port on the AT-1.0 Amplified Terminator or other high IR output source.
2. **EMITTER OUTPUTS** – Ten 3.5mm jacks drive any selection of single or dual emitters with current sharing resistors at medium power.
3. **HIGH IR LOOP OUT** – 3.5mm jack allows High IR drive to be looped to additional EMX-1.0's for increased emitter expansion (up to 5 EMX-1.0's, 50 emitters MAX).
4. **Adhesive Bottom Cover** – Protects the bottom of the PCB and also allows attachment of the EMX-1.0 to any flat, dry, clean surface. Simply peel-off the protective cover to expose the adhesive.
5. **PTP-1 3.5mm Plug-to-Plug Cable** – Included 1 foot cable connects the EMX-1.0 to the AT-1.0 Amplified Terminator and for looping to additional EMX-1.0's.

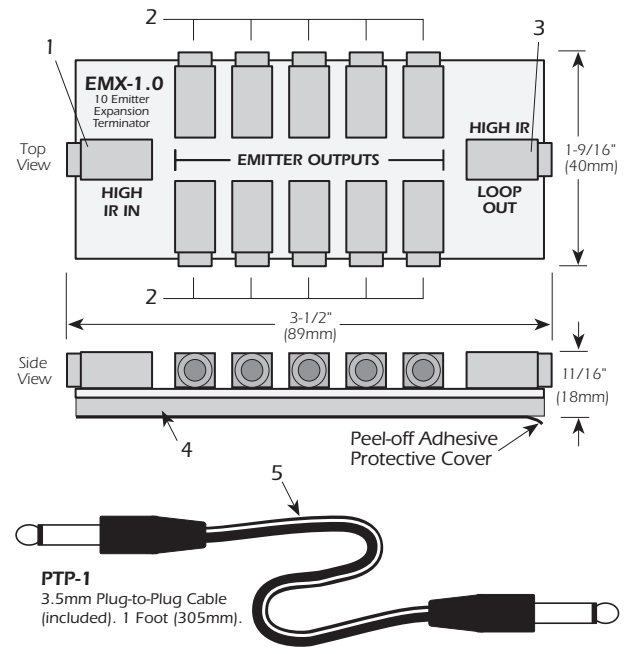

Fig. 1. The EMX-1.0

SYSTEM CONNECTIONS

The following are typical applications of the EMX-1.0 in IR repeater systems.

A Basic Emitter Expansion System

Fig. 2 shows a typical installation, such as controlling a large group of components for duplication recording, etc.

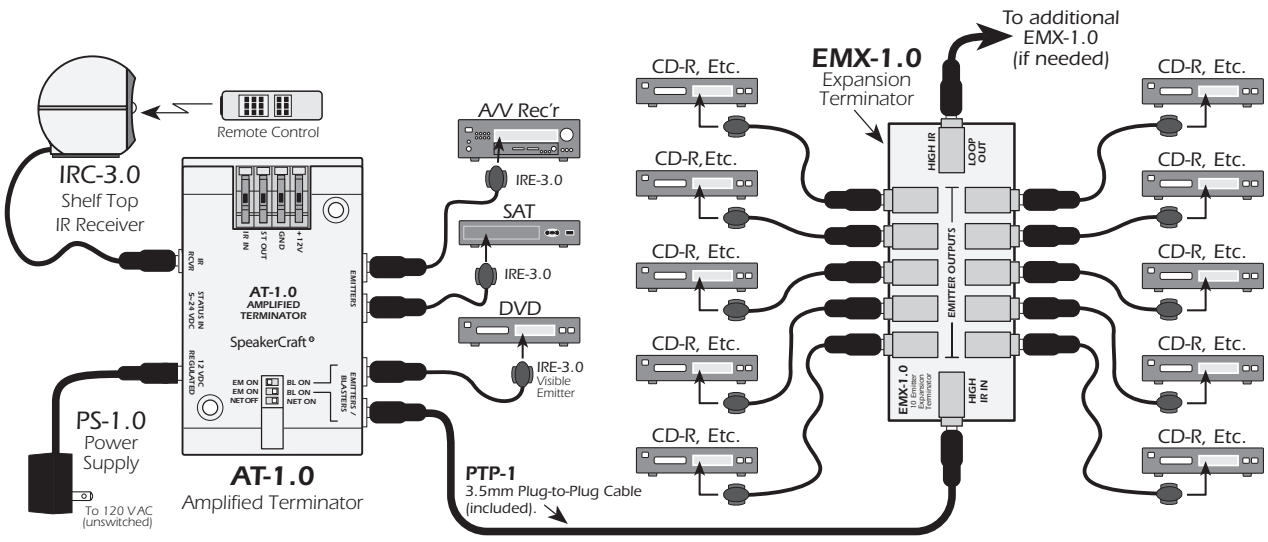

1. Plug in the IR Receiver and Emitters into the AT-1.0 as shown.
2. Set the middle DIP switch on the AT-1.0 to the **BL ON** position.
3. Plug the PTP-1 cable into the lower EMITTERS/BLASTERS jack on the AT-1.0 and into the HIGH IR IN jack on the EMX-1.0 as shown.
4. Plug the remaining emitters into the EMX-1.0 EMITTER OUTPUT jacks.
   Note 1: Since the EMX-1.0 employs emitter current sharing, you may use any of the IRE-1.0 and 2.0, 3.0, or 4.0 SpeakerCraft emitters in any combination you wish.
   Note 2: Failure to place the DIP switch at the **BL-ON** position for the EMITTERS/BLASTERS jack that feeds the EMX-1.0 will result in insufficient power to drive the expansion emitters.
5. Plug in the Power Supply.

The AT-1.0 Amplified Terminator, in conjunction with the EMX-1.0 Expansion Terminator, should now control the components.

Looping to Additional EMX-1.0's

Fig. 3 shows how you can loop additional EMX-1.0's to control very large numbers of components.

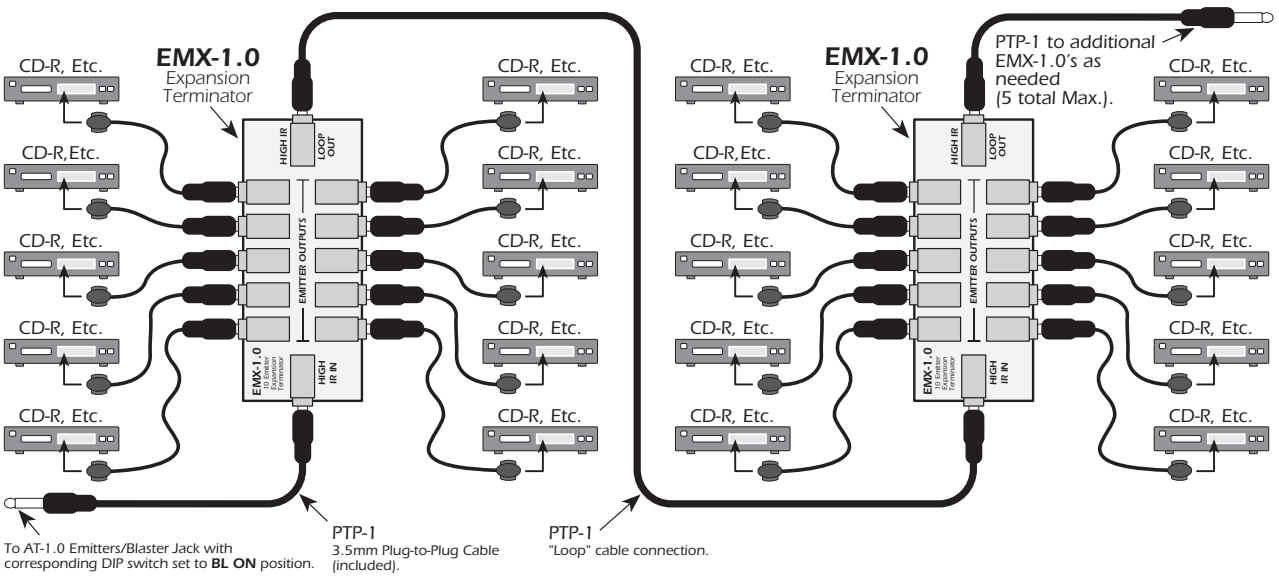

To do this, simply use the PTP-1 Cable, supplied with each EMX-1.0, to loop each of the EMX-1.0's together as shown.

CAUTION: Use five EMX-1.0's max. with one AT-1.0 to drive a maximum of 50 emitters. Additional EMX-1.0's on one AT-1.0 may result in insufficient power to drive the emitters adequately. If more than 50 emitters are needed, use a second AT-1.0 to drive the additional EMX-1.0's (parallel the IR IN's & Gnds of the AT-1.0's terminals).